BURGMER
OUR VALVES FOR YOUR BUSINESS

Siegersbusch 23-25 D-42327 Wuppertal
Tel: +49 (0)202 278 59 0
info@burgmer-armaturen.de
www.burgmer-armaturen.de

DOUBLE GATE SLIDE VALVE

430 DBS

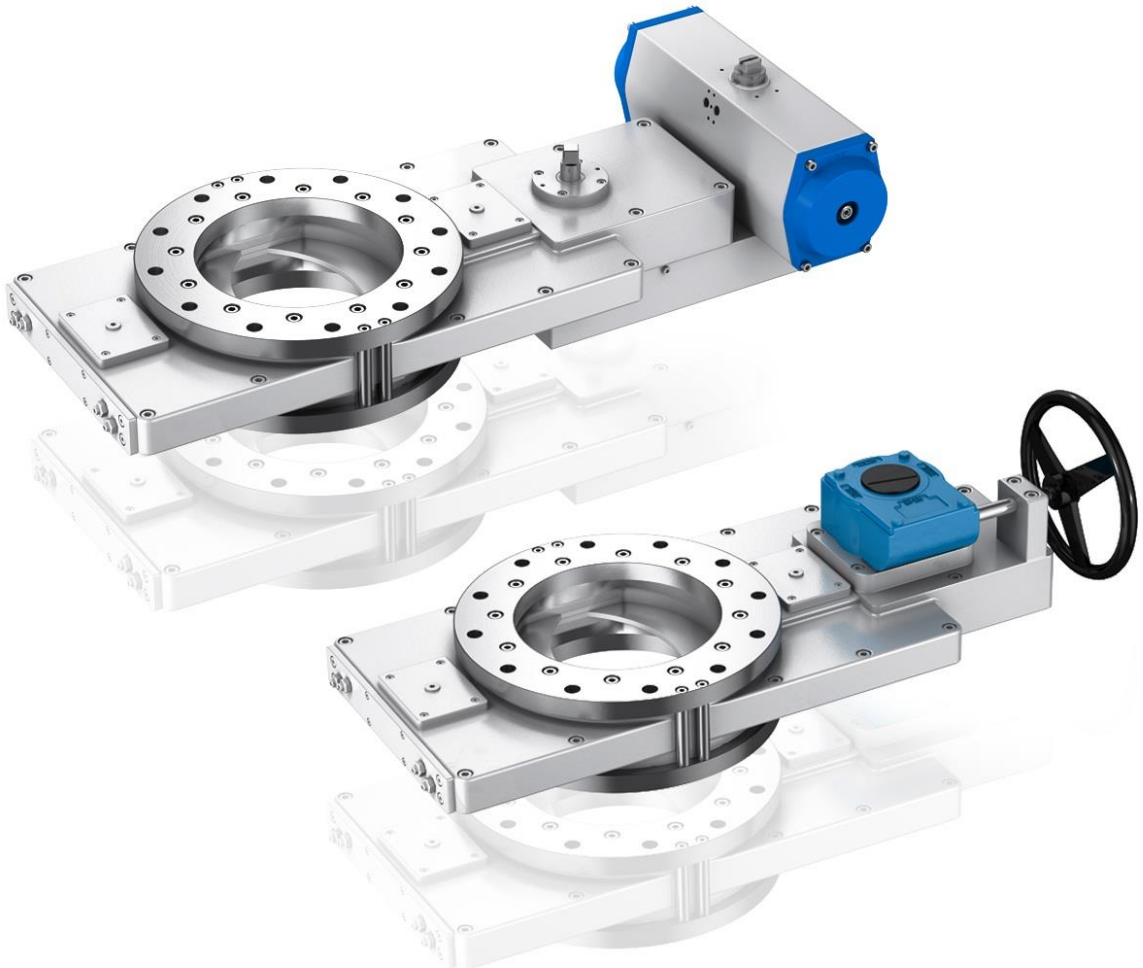

MADE IN GERMANY

DBS

BURGMER Apparatebau GmbH All Rights reserved 2018

BURGMER
OUR VALVES FOR YOUR BUSINESS

DOUBLE GATE SLIDE VALVE 430 DBS

Application area	Silo trailers, Food industry
	Pharmaceutical-/ Chemical industry, Plant engineering
Installation situation	Wafer type / Lug type
Medium/aggregate state	Bulks
Diameter	DN 80 – DN 300
Feature	product-tight
	engineered for dosing

Materials

Slide housing	EN AC-51100
Slide plates	1.0038 hard chrome plated
	1.4571 hard chrome plated
	1.4120
	Hardox
Sealing	PUR, NBR, EPDM, CSM, FKM
Flange boring	TW-standard, PN6, PN10
Actuation	pneumatic driven (double-acting)
	electric driven (setting-drive / variable speed drive)
	Hand worm gear
	Hand lever
Feature	Blocking air logic
	Positioner

MADE IN GERMANY

DBS

BURGMER Apparatebau GmbH All Rights reserved 2018

BURGMER
OUR VALVES FOR YOUR BUSINESS

DOUBLE GATE SLIDE VALVE 430 DBS

Hand lever

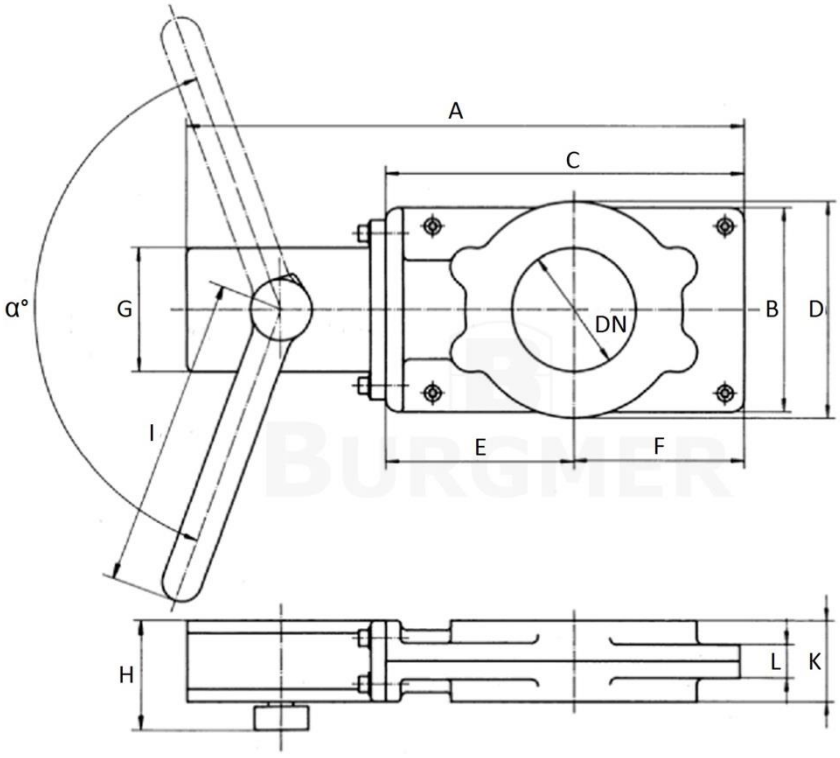

DN	A	B	C	D	E	F	G	H	I	K	L	Swivel angle
80	408	145	248	154	131	117	100	100	245	65	27	143°
100	448	166	288	175	151	137	100	100	245	65	27	172°

technical changes reserved*

MADE IN GERMANY

DBS

BURGMER Apparatebau GmbH All Rights reserved 2018

BURGMER
OUR VALVES FOR YOUR BUSINESS

DOUBLE GATE SLIDE VALVE 430 DBS

Hand worm gear

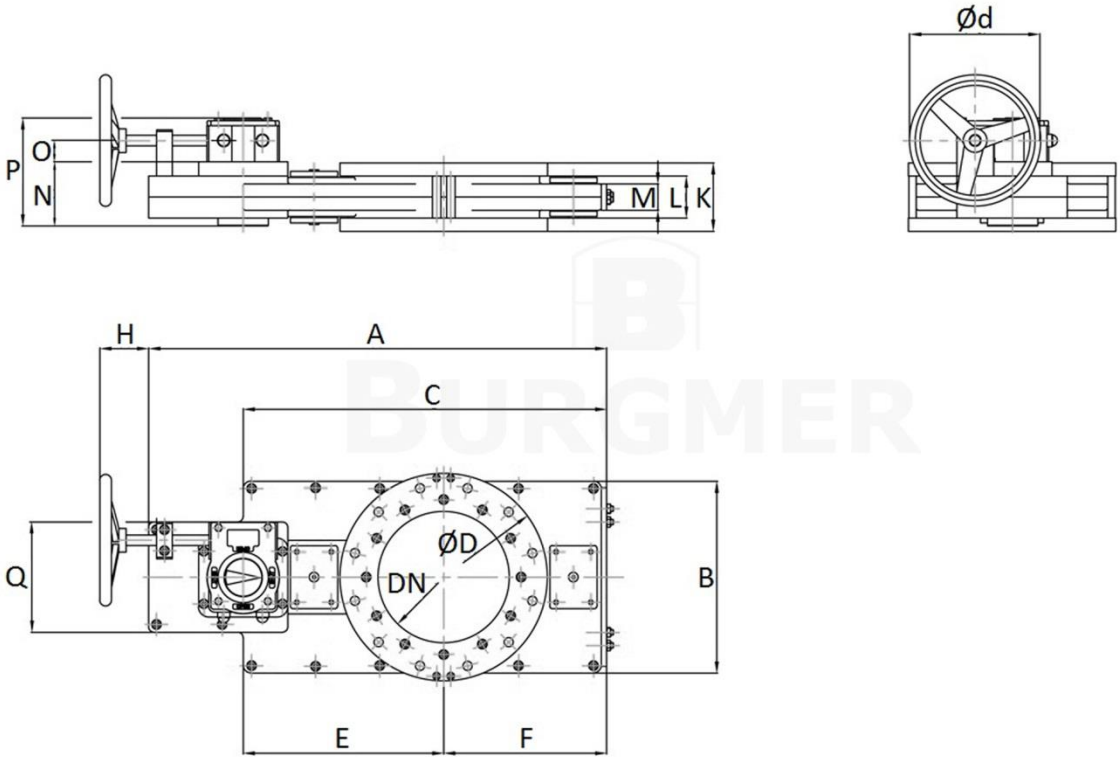

DN	A	B	C	D	E	F	H	K	L	M	N	O	P	Q	d	Hand worm gear
150	702	215	455	285	255	200	95	110	70	41	110	41	194	155	200	AB 550 N
200	859	310	577	342	317	260	95	110	70	45	110	41	194	155	200	AB 550 N
250	1021	365	692	365	382	310	100	130	80	50	122	41	206	205	250	AB 550 N
300	1148	420	797	420	432	365	100	130	80	50	122	41	206	205	250	AB 550 N

technical changes reserved*

MADE IN GERMANY

DBS

BURGMER Apparatebau GmbH All Rights reserved 2018

BURGMER
OUR VALVES FOR YOUR BUSINESS

DOUBLE GATE SLIDE VALVE 430 DBS

Pneum. Actuator

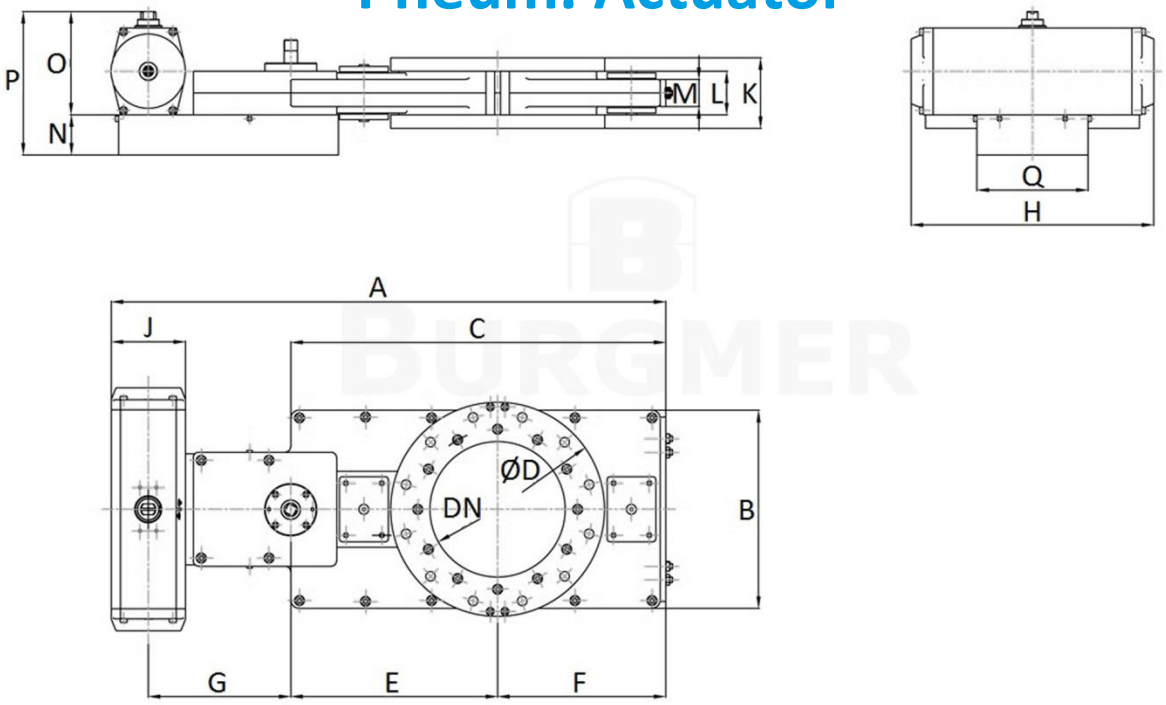

DN	A	B	C	D	E	F	G	H	J	K	L	M	N	O	P	Q	Actuator
80	408	145	248	154	131	117	83	268	92,5	65	27	27	80	130	210	100	GTWB 83/180
100	448	166	288	175	151	137	83	268	92,5	65	27	27	80	130	210	100	GTWB 83/180
150	702	215	455	285	255	200	187	323	120	110	70	41	67	170	237	155	GTWB 110/180
200	859	310	577	342	317	260	222	426	120	110	70	45	67	170	237	155	GTWB 118/180
250	1021	365	692	365	382	310	260	448	137	130	80	50	74	190	264	205	GTWB 127/180
300	1148	420	797	420	432	365	282	448	137	130	80	50	74	190	264	205	GTWB 127/180

technical changes reserved*

MADE IN GERMANY

DBS

BURGMER Apparatebau GmbH All Rights reserved 2018